# INVITATION TO BID

**ATTENTION: This is not an order. Read all instructions, terms and conditions carefully.**

| | | |
|---|---|---|
| **INVITATION NO.:** | **KCT-00861** | **RETURN ORIGINAL COPY OF BID TO:** |
| **Issue Date:** | August 21, 2012 | **KCTCS** |
| **Method of Award:** | Best Value | **PURCHASING DEPARTMENT** |
| **Purchasing Officer:** | Tonya Peters | **300 NORTH MAIN STREET** |
| **Phone:** | (859) 256-3336 | **VERSAILLES, KY 40383** |
| **Bids are invited on the following:** | **Industrial Robot** | |

**IMPORTANT: SEALED BIDS MUST BE RECEIVED BY August 30, 2012 by 4:00 PM Eastern Time**

1. Sealed Bids for furnishing the following will be received by the Purchasing Department, KCTCS, Versailles, Kentucky, until the date and time stated above. ***Bid documents must be submitted in a sealed envelope identified with the Invitation to Bid number and the opening/return date on the face of the envelope*** ***FACSIMILE BIDS WILL NOT BE ACCEPTED.***
2. Please quote your single best net price on each item, unless a discount from list price is requested, delivered to the address specified, all transportation charges prepaid. Price shall include delivery to the department address shown on this Invitation. Submission of two (2) bids may result in disqualification of both bids.
3. Bids must be firm. Those containing escalator clauses cannot be accepted, unless provided for in Special Conditions. To receive consideration, bids must be made on this form and signed in full. Prices must be based on stated units and extended. Delivery guarantee must be shown. Bids will be rejected unless filled out in ink or on typewriter and signed in ink.
4. The KCTCS Sales Tax Exemption Number is A-20633. Certificate will be provided upon request. Do Not Quote Sales Tax. (...continued on following page.....)

**SIGNATURE REQUIRED: This bid cannot be considered valid unless signed and dated by an authorized agent of the bidder. Type or print the information requested in the spaces provided.**
**ALL BIDS ARE TO BE "TRANSPORTATION CHARGES PREPAID, F.O.B. DESTINATION"**

**THIS AREA MUST BE COMPLETED**

| | | |
|---|---|---|
| **DELIVERY TIME:** | **NAME OF COMPANY** | **PHONE:** |
| **BID FIRM THROUGH:** | **NO. & STREET** | **FAX:** |
| **PAYMENT TERMS: NET 30**<br>**Must Accept Purchase Order** | **CITY, STATE & ZIP CODE** | |
| **F.O.B. DELIVERED**<br>**ALL DELIVERY CHARGES**<br>**INCLUDED IN PRICES SHOWN** | **SIGNATURE** | **DATE:** |
| **FEDERAL ID NUMBER (EIN):** | **TYPED OR PRINTED NAME** | |
| | **EMAIL:** | |

**In submitting this bid, it is expressly agreed that, upon proper acceptance by Kentucky Community and Technical College System of any or all items bid, a contract shall thereby be created with respect to the items accepted.**

**BIDS MAY ALSO BE VIEWED AT OUR WEBSITE: http://www.kctcs.edu, Vendors, Opportunities To Bid.**
**All bids and contracts are subject to General Terms and Conditions of KCTCS. You may download/print a copy of these from our website or you may request a copy be mailed to you by contacting the Purchasing Department at 859-256-3336.**

Rev. February 2004

AUTHENTICATION OF BID AND STATEMENT OF NON-COLLUSION AND NON-CONFLICT OF INTEREST

I hereby swear (or affirm) under the penalty for false swearing as provided by KRS 523.040:

1. That I am the bidder (if the bidder is an individual), a partner, (if the bidder is a partnership), or an officer or employee of the bidding corporation having authority to sign on its behalf (if the bidder is a corporation);
2. That the attached bid has been arrived at by the bidder independently and has been submitted without collusion with, and without any agreement, understanding or planned common course of action with, any other vendor of materials, supplies, equipment or services described in the Invitation to Bid, designed to limit independent bidding or competition;
3. That the contents of the bid or bids have not been communicated by the bidder or its employees or agents to any person not an employee or agent of the bidder or its surety on any bond furnished with the bid or bids and will not be communicated to any such person prior to the official opening of the bid or bids:
4. That the bidder is legally entitled to enter into contracts with KCTCS and is not in violation of any prohibited conflict of interest, including those prohibited by the provisions of KRS 164.390,61.096, and 42.990, and;
5. That I have fully informed myself regarding the accuracy of the statement made above.

NOTICE

1. Any agreement or collusion among bidders or prospective bidders which restrains, tends to restrain, or is reasonably calculated to restrain competition by agreement to bid at a fixed price or to refrain from bidding, or otherwise, is prohibited.
2. Any person who violates any provisions of KRS 45A.325 shall be guilty of a felony and shall be punished by a fine of not less than five thousand dollars nor more than ten thousand dollars, or be imprisoned not less than one year nor more than five years, or both such fine and imprisonment. Any firm, corporation, or association which violates any of the provisions of KRS 45A.325 shall, upon conviction, be fined not less than ten thousand dollars nor more than twenty thousand dollars.

SWORN STATEMENT OF COMPLIANCE WITH CAMPAIGN FINANCE LAWS

In accordance with KRS45A.110(2), the undersigned hereby swears under penalty of perjury that he/she has not knowingly violated any provision of the campaign finance laws of the Commonwealth of Kentucky and that the award of a contract to a bidder will not violate any provision of the campaign finance laws of the Commonwealth of Kentucky.

CONTRACTOR REPORT OF PRIOR VIOLATIONS OF KRS CHAPTERS 136, 139, 141, 337, 338, 341 & 342

The contractor by signing and submitting a bid on this invitation agrees as required by 45A.485 to submit final determinations of any violations of the provisions of KRS Chapters 136, 139, 141, 337, 338, 341 and 342 that have occurred in the previous five (5) years prior to the award of a contract and agrees to remain in continuous compliance with the provisions of the statutes during the duration of any contract that may be established. Final determinations of violations of these statutes must be provided to KCTCS by the successful contractor prior to the award of a contract.

CERTIFICATION OF NON-SEGREGATED FACILITIES

The contractor, by submitting a bid on this Invitation, certifies that he/she is in compliance with the Code of Federal Regulations, No. 41 CFR 60-1.8(b), that prohibits maintaining segregated facilities.

INSTRUCTIONS TO BIDDERS:

Bidder's response on the following items must include full identification of the item(s) proposed, and be accompanied by descriptive literature, etc., to enable the purchaser to evaluate qualifications of the item(s) proposed as equal to those specified. ALL ALTERNATE QUOTATIONS MUST BE ACCOMPANIED BY COMPLETE LITERATURE AND SPECIFICATIONS TO EVALUATE ALTERNATE QUOTE AS EQUAL TO THAT SPECIFIED. FAILURE TO PROVIDE SUFFICIENT INFORMATION WILL BE CAUSE FOR REJECTION OF THE BID.

When a Bidder proposes to furnish the exact item specified, he shall cite, beside the item, or use the Mfg. & Model No. Proposed blank that follows the line item as follows:

1. If bidding the manufacturer and model number specified in this Invitation, write in "AS SPECIFIED".
2. If bidding an alternate model, identify by manufacturer's number and model.
3. If bidding a private label model, identify as private label and show stock number.

**ALL BIDS ARE TO BE "TRANSPORTATION CHARGES PREPAID, F.O.B. DESTINATION"**

METHOD OF AWARD

Unless otherwise specified, it is the intent of KCTCS to award this Invitation to Bid on a Best Value bid basis. In the event no satisfactory bids are received, we reserve the right to award on a group award basis. Separate purchase orders may not be issued unless there is a savings of at least $25.00 to KCTCS.

**Scope**
You are invited to bid on the following Industrial Robot for the Kentucky Community and Technical College System (KCTCS), Bowling Green Technical College, Transpark Center, 221 Commonwealth Blvd, Bowling Green KY 42101.

**Equipment**
Attached is the list of items required. All items are to be **"New and Current Model(s).** All serial number tags, FCC approval numbers, model numbers, etc. must be affixed on each piece of equipment at the time of delivery. Equipment will be inspected and rejected if these numbers are not affixed or have been altered.

**Equipment Listing Requirements:**
All equipment and assemblies of equipment offered in response to this Invitation to Bid shall be in full compliance with all current applicable standards established by Federal, State, and Local governments, including, but not limited to OSHA, NFPA 70, NFPA 79, ANSI/RIA R15.06-1999 the Kentucky Building Code and all applicable references noted therein. The equipment must also be listed and labeled by a nationally recognized testing laboratory (NRTL) or certified by field evaluation and labeled by a third party nationally recognized testing laboratory (NRTL) acceptable to the authority having jurisdiction in Kentucky to certify compliance with applicable codes and safety requirements. If a listing does not exist or third party certification cannot be provided for said equipment, the services of a Professional Engineer licensed in the Commonwealth of Kentucky may also be procured by the bidder to certify that the equipment has been constructed in accordance with NFPA 79 and UL 508A standards and their references. **All costs associated with required listings or certifications shall be included in the bid price.** Each piece of equipment or assembly of equipment offered in the bid shall either be listed and labeled or certified and labeled prior to shipment by the successful bidder.

**Alternates**

**NO ALTERNATES WILL BE ACCEPTED. MUST BID AS SPECIFIED TO MATCH EXISTING.**

**Delivery**
All items are to be shipped **F.O.B. Destination**, **all freight/destination charges included in the price.** The successful vendor will be responsible for all equipment while in transit. Any freight claims will be the responsibility of the vendor. The College will reject any damaged shipments and immediate notification will be given to the vendor.

**METHOD OF AWARD**
Best Value – Ranking Approach
KCTCS intends to award a Contract to the Vendor, whose offer, conforming to the Solicitation, is the most advantageous on the basis of "best value" for all products, services, and requirements contained herein.
An evaluation committee, or a designated individual, will evaluate the information provided by the Vendor in response to the established measurable criteria contained in the Solicitation.

**Measurable Criteria:**
**Price 100 Points**

**TOTAL POINTS 100 Points**
Each Vendor is responsible for submitting all relevant, factual and correct information with their offer to enable the evaluator(s) to afford each Vendor the maximum score based on the available data submitted by the Vendor.
VENDOR SHALL ENTER UNIT PRICE AND TOTAL PRICE ON THE BID SHEET. If adequate space is not available, the Vendor must attach additional information that clearly cross-references the appropriate location in the solicitation (i.e. page number, paragraph, subject, etc.).

**Price (100 points)**
**The bidder with the lowest Price receives the maximum score.** The bidder with the next lowest Price receives points by dividing the lowest Price by the next lowest price and multiplying that percentage by the available points. For example, 95 points is allocated to the lowest Price criteria for this procurement, Bidder “A” bids $3.00 as the lowest bidder and receives the maximum 95 points ($3.00 / $3.00 = 1.00 x 95 = 95). Assume Bidder “B” is the next lowest bidder at $4.00, then “B” receives 71.3 points ($3.00 / $4.00) = .75 x 95 = 71.25).

Best Value scoring is subject to Reciprocal Preference for Kentucky resident bidders.

**Kentucky Reciprocal Preference Laws**
In accordance with KRS 45A.490 to 45A.494, Kentucky Resident Bidder Status, a resident Offeror of the Commonwealth of Kentucky shall be given a preference against a nonresident Offeror. In evaluating proposals, KCTCS will apply a reciprocal preference against an Offeror submitting a proposal from a state that grants residency preference equal to the preference given by the state of the nonresident Offeror. Residency and nonresidency shall be defined in accordance with KRS 45A.494(2) and 45A.494(3), respectively. Any Offeror claiming Kentucky residency status must submit with its bid/proposal a notarized affidavit (Resident Bidder Claim Form,) with supporting documentation affirming that it meets the criteria as set for in the above referenced statute.

Further, in accordance with KRS 45A.465 and 45A.470, any bidder wishing to claim qualified bidder status must complete and include an Affidavit for Qualified Bidder Status with their response. In evaluating responses, KCTCS will apply preference in accordance with KRS 45A.470. An Affidavit for Qualified Bidder Status forms is available from KCTCS Purchasing, upon request.

**Bid Submittal**
Bids and any addenda's must be received no later than the date and time show on the front page of this Invitation to Bid. All bids and any addenda's must be received in a sealed envelope/package clearly identified with the Invitation to Bid Number in the lower left corner.

**Kentucky Sales and Use Taxes**
Sales of tangible personal property or services to the State of Kentucky and its constitutional agencies are not subject to state sales or use taxes.

**Inspection**
All supplies and equipment shall be subject to inspection or tests by the college prior to acceptance. In the event supplies or equipment are defective in material or workmanship or otherwise not in conformity with specified requirements, the college shall have the right to reject them or require acceptable correction at the vendor's expense.

**Compliance with Federal Requirements**
Where this procurement involves the expenditure of federal assistance or contract grant funds, the awarded contractor shall comply with such federal law and authorized regulations which are mandatory applicable and which are not presently set forth elsewhere in this solicitation. Office of Management and Budget Circular A-102, Appendix "O" requires but is not limited to, compliance with the following provisions;
(1) All contracts awarded in excess of $10,000 by grantees and their contractors or sub grantees require compliance with Executive Order 11246, entitled "Equal Employment Opportunity", as amended by Executive Order 11375, and as supplemented in Department of Labor regulations (41 CFR Part 60).
(2) All negotiated contracts (except those awarded by small purchase procedures) awarded by grantees provide that the grantee, the Federal grantor agency, the Comptroller General of the United States, or any of their duly authorized representatives, shall have access to any books, documents, papers and records of the contractor which are directly pertinent to this specific contract, for the purpose of making audit, examination excerpts and transcriptions. Contractors are to maintain all required records for three years after grantees make final payments and all other pending matters are closed.
(3) Contracts, subcontracts and subgrants of amounts in excess of $100,000 requires compliance with all applicable standards, orders, or requirements issued under Section 306 of the Clean Air Act (42 U.S.C. 1857 (h), Section 508 of the Clean Water Act 33 U.S.C. 1368), Executive Order 11738 and Environmental Protection Agency regulations (40 CFR Part 15), which prohibit the use under non-exempt Federal contracts, grants or loans of facilities included on the EPA List of Violating Facilities. This provision requires reporting of violations to the grantor agency and to the U.S.E.P.A. Assistant.

**Rejection of Bids**
KCTCS reserves the right to reject any and all bids when it is in the best interest of KCTCS to do so.

**Warranty**
The manufacturer's most favorable warranty offered to preferred customers shall apply to all items. A copy of such warranty shall be furnished to the college upon delivery of the equipment or product.

**Oral Discussions**

Potential bidders should clearly understand that any verbal representations made or assumed to be made during any oral discussions held between representatives of potential bidders and any State employee or official are not binding on the Commonwealth of Kentucky or its constitutional agencies or colleges.

**Compliance With State Laws**

Any contracts or orders placed as a result of an offer shall be governed by the laws of the Commonwealth of Kentucky. The rights and obligations of the parties thereto shall be determined in accordance with these laws. Any offer conditioned upon governance by the laws of a state other than Kentucky shall not be considered.

**Post Contract Agreements**

KCTCS shall not be required to enter into nor sign further agreements, leases, company orders or other documents to complete or initiate the terms of a resulting order. Any such documents so obtained will be non-binding on KCTCS and be cause for breach of contract.

**Questions**

All questions are to be submitted to the Purchasing Department **not later than seven (7) days prior to bid opening**, via fax (859-256-3124) or email (preferred) to: tonya.peters@kctcs.edu.

**[Robot's Outer Dimensions and Operating Range]**

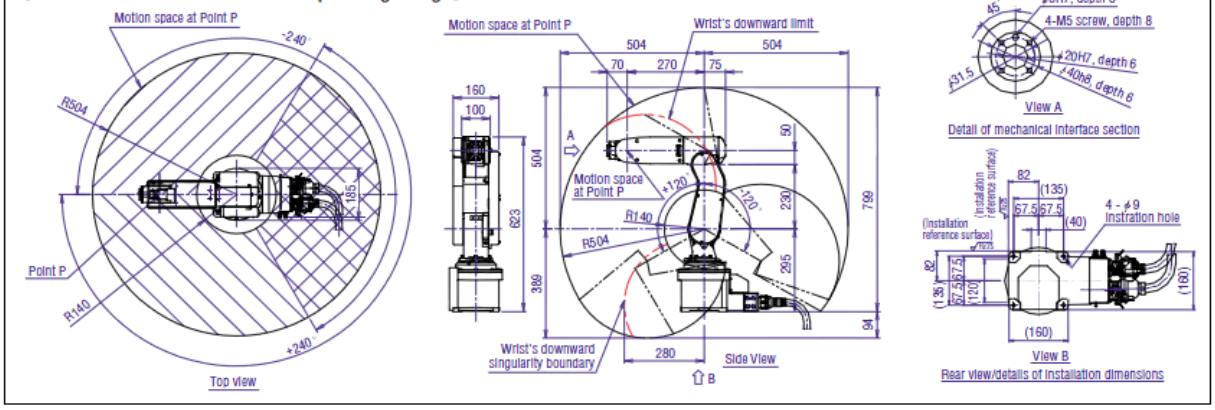


## Specifications

### Robot Arm

| Item | | Unit | Specification |
|---|---|---|---|
| Type | | | RV-2SDB / RV-2SQB |
| Protection class | | | IP30 |
| Installation | | | Floorstanding, ceiling-hung, and wall-mounted *1 |
| Structure | | | Vertical articulated arm robot |
| Degrees of freedom | | | 6 |
| Arm length | | mm | 230+270 |
| Maximum reach radius | | mm | 504 |
| Operating range | J1 | deg | 480 (-240 to +240) |
| | J2 | | 240 (-120 to +120) |
| | J3 | | 160 (0 to +160) |
| | J4 | | 400 (-200 to +200) |
| | J5 | | 240 (-120 to +120) |
| | J6 | | 720 (-360 to +360) |
| Maximum speed | J1 | deg/s | 225 |
| | J2 | | 150 |
| | J3 | | 275 |
| | J4 | | 412 |
| | J5 | | 450 |
| | J6 | | 720 |
| Maximum composite speed | | mm/s | 4400 |
| Cycle time *3 | | s | 0.68 |
| Load Capacity | Rated | kg | 2.0 |
| | Maximum | kg | 3.0 (wrist, downward) |
| Position repeatability | | mm | ±0.02 |
| Mass | | kg | 19 |

*1 There are limits to J1 motion when wall-mounted.
*2 All axes are equipped with a brake.
*3 Value at a load of 1kg when the robot reciprocates 25mm vertically and 300mm horizontally.

### Controller

| Item | | Unit | Specification | | Remark |
|---|---|---|---|---|---|
| Type designation | | | CR1DA-771 (RV-2SDB) | CR1QA-771 (RV-2SQB) | |
| Robot language | | | MELFA-BASIC V | | |
| Position teaching method | | | Teaching method, MDI method | | |
| External input/output | Input/output | Point | 0 input / 0 output (maximum 256/256, available as option) | 8192 / 8192 (between sequencer and robot) | |
| | Dedicated input/output | Point | Assigned according to general-purpose I/O. | | |
| | Input for shutdown purpose only | Point | 1 | | |
| | Hand open/close input/output | Point | 4 inputs / 0 output | | 4 additional outputs are available as option. |
| | External emergency shutdown input | Point | 1 | | Double-redundant |
| | Door switch input | Point | 1 | | Double-redundant |
| | Enabling device input | Point | 1 | | Double-redundant |
| | Synchronization of additional axes | Point | 1 | | Double-redundant |
| | Mode output | Point | 1 | | Double-redundant |
| | Error output | Point | 1 | | Double-redundant |
| Interface | RS-232 | ports | 1 | – | Extensions for computer, vision sensor, etc. |
| | RS-422 | ports | 1 | | I/F dedicated to TB |
| | Ethernet | ports | 1 | 1 (dual-use, user and TB) | 10BASE-T / 100BASE-TX |
| | USB | ports | 1 | – | Device function only, mini-B terminal |
| | Additional-axis I/F | channels | 1 | | SSCNET III |
| | Tracking I/F | channels | 1 | – | For connecting encoder cable |
| | Slot for hand | slots | 1 | | Slot dedicated to air hand I/F |
| | Extension slot | slots | 1 | – | For installing optional I/F |
| Power supply | Input voltage range | V | Single phase, AC200 to 230±10% (180 to 253) | | |
| | Power capacity | KVA | 0.5 | | Not including in-rush current |
| | Frequency | Hz | 50 / 60 | | |
| External dimensions | | mm | 240(W) x 290(D) x 200(H) | | Protrusions excluded |
| Weight | | kg | Approx. 9 | | |
| Structure | | | Self-contained floor type / open structure (IP20) | | |
| CPU | Type designation | | – | Q172DRCPU | iQ Platform-compliant |

## Configurations Options

| Classification | Name | Type | Specification overview | RV-2SDB | RV-2SQB |
|---|---|---|---|---|---|
| Robot arm | Solenoid valve set | 1E-VD01/VD01E | Solenoid valve (with an output cable, 1 valve) (sink/source) | ○ | ○ |
| | | 1E-VD02/VD02E | Solenoid valve (with an output cable, 2 valves) (sink/source) | ○ | ○ |
| | Hand output cable | 1E-GR35S | With a robot-side connector, not terminated at another end | ○ | ○ |
| | Hand input cable | 1S-HC30C-11 | With a robot-side connector, not terminated at another end | ○ | ○ |
| | Hand curl tube | 1E-ST0402C | φ4 tube, number of sets - 2 | ○ | ○ |
| | | 1E-ST0404C | φ4 tube, number of sets - 4 | ○ | ○ |
| | Stopper for changing operating range | 1S-DH-11J1 | For limiting J1 axis rotation (±210 deg., ±150 deg., ±90 deg.) | ○ | ○ |
| | | 1S-DH-11J2 | For limiting J2 axis rotation (±30 deg.) | ○ | ○ |
| | | 1S-DH-11J3 | For limiting J3 axis rotation (+70 deg.) | ○ | ○ |
| | Machine cable, for extension/fixed | 1S-05CBL-03 | Extension type: 5 m | ○ | ○ |
| | | 1S-10CBL-03 | Extension type: 10 m | ○ | ○ |
| | | 1S-15CBL-03 | Extension type: 15 m | ○ | ○ |
| | Machine cable, for extension/flexible | 1S-05LCBL-03 | Extension type: 5 m | ○ | ○ |
| | | 1S-10LCBL-03 | Extension type: 10 m | ○ | ○ |
| | | 1S-15LCBL-03 | Extension type: 15 m | ○ | ○ |
| Controller | Teaching pendant, standard version | R32TB | 7 m: Standard / 15 m: Custom | ○ | ○ |
| | High-function teaching pendant | R56TB | 7 m: Standard / 15 m: Custom | ○ | ○ |
| | Air hand interface | 2A-RZ365/375 | 8 output points, used exclusively for hand (sink/source) | ○ | ○ |
| | Parallel I/O unit (remote) | 2A-RZ361/371 | 32 output points / 32 input points (sink/source) | ○ | × |
| | External I/O cable | 2A-CBL05/2A-CBL15 | Cable length: 5 m / 15 m, not terminated at one end (for 2A-RZ361/371) | ○ | × |
| | Parallel I/O interface (on-board) | 2D-TZ368/378 | 32 output points / 32 input points (sink/source) | ○ | × |
| | External I/O cable | 2D-CBL05/2D-CBL15 | Cable length: 5 m / 15 m, not terminated at one end (for 2D-TZ368/378) | ○ | × |
| | CC-Link interface | 2D-TZ576 | CC-Link intelligent device station, Version 2.0, 1 to 4 stations | ○ | × |
| | PROFIBUS interface | 2A-RZ577 | Slave station, combined total number of input and output data: 192 words | ○ | × |
| | DeviceNet Slave interface | 2D-TZ571 | Slave station, Release 2.0 is supported | ○ | × |
| | Additional memory | 2D-TZ454 | User program area with additional memory: 2MB | ○ | × |
| | Personal computer support softwware | RT-Toolbox2 | With simulation function (CD-ROM) | ○ | ○ |
| | Personal computer support softwware-mini | RT-Toolbox2 Lt | Lite Version (CD-ROM) | ○ | ○ |
| | Personal computer cable | 2D-232CBL03M | For PC-AT compatible machine, 3 m | ○ | × |
| | MELFA-Vision | MELFA-Vision | COGNEX Vision System-compliant | ○ | ○ |
| | 3D simulator (MELFA-Works) | MELFA-Works | Add-in to Solidworks software | ○ | ○ |
| Service part | Backup battery | ER6 | Installed in the robot arm (Quantity: 4pcs) | ○ | ○ |
| | | Q6BAT | Installed in the controller (Quantity: 1pc) | ○ | ○ |

**NO ALTERNATES WILL BE ACCEPTED. MUST BID AS SPECIFIED TO MATCH EXISTING.**

***Must bid on all items to be considered.**

| ITEM | QTY | CATALOG # / MODEL / DESCRIPTION | UNIT PRICE | EXTENDED PRICE |
|---|---|---|---|---|
| **1** | 2ea | **#RV-2SDB-S15 Mitsubishi Robot Arm**<br>2 Kg, 6-axis, 504mm reach<br><br>Includes:<br>• Mitsubishi RV-2SDB-S15 Arm<br>• CR1DA-771-S15 Controller<br>• Power and Signal Cables<br>• Manual<br>• Two Year limited warranty | $_____ | $_____ |
| MANUFACTURER/MODEL Bidding _____<br>Warranty:_____ | | | | |
| **2** | 2ea | **#2D-TZ378 Mitsubishi** Card, Onboard I/O, 32/32, Source, SD-Series | $_____ | $_____ |
| MANUFACTURER/MODEL Bidding _____<br>Warranty:_____ | | | | |
| **3** | 2ea | **#R32TB** Teach Pendant, 7m cable, Standard, SD/SQ Series | $_____ | $_____ |
| MANUFACTURER/MODEL Bidding _____<br>Warranty:_____ | | | | |
| **4** | 2ea | **#RD300117** Pneumatic Hand Kit, Sink, RV-1A/2AJ<br>Kit to include:<br>2A-RZ365 Card, Interface, Hand, Pneu, Sink<br>Valve Set, 2 row, Sink<br>1A-ST0402C Tube, Hand-Curl<br>9662-DO MEPAC Gripper<br>Hand/Robot Adapter Assembly<br>(One (1) MEPAC X9662-DO General Purpose Type gripper to be provided within the RD200252 Pneumatic Hand Assembly – Stroke – 10.0mm, Gripping force = 3.5kgf/4.0kgfcm2.) | $_____ | $_____ |
| MANUFACTURER/MODEL Bidding _____<br>Warranty:_____ | | | | |

| ITEM | QTY | CATALOG # / MODEL / DESCRIPTION | UNIT PRICE | EXTENDED PRICE |
|---|---|---|---|---|
| **5** | 2ea | **#RD200925** Cable I/O, RV-SD & SQ Robots, 2D-CBL05, 12ft | $_____ | $_____ |
| MANUFACTURER/MODEL Bidding _____<br>Warranty:_____ | | | | |

| | | | | |
|---|---|---|---|---|
| 6 | 1ea | #**RT-TOOL-BOX-2-L** Software, Standard, w/o Simulation Tool | $_____ | $_____ |
| MANUFACTURER/MODEL Bidding _____<br>Warranty:_____ | | | | |

| | | | | |
|---|---|---|---|---|
| 7 | | **TRAINING**: Training for **TWO,** up to four days basic robot training by a factory trained and certified Mitsubishi Robotic engineer.<br>Please specify below if training will be held at the college or other facility. | $_____ | $_____ |
| Training location:<br>_____ | | | | |

**No installation required.**

**All equipment must be constructed in accordance with ANSI/RIA R15.06-1999 standards and their references.**

**NO ALTERNATES WILL BE ACCEPTED. MUST BID AS SPECIFIED TO MATCH EXISTING.**

***Must bid on all items to be considered.**

**TOTAL COST OF ALL ITEMS INCLUDING SHIPPING $_____**

**Bid #: KCT-00861**

## REQUIRED AFFIDAVIT FOR BIDDERS, OFFERORS AND CONTRACTORS CLAIMING RESIDENT BIDDER STATUS

**FOR BIDS AND CONTRACTS IN GENERAL:**
The bidder or offeror hereby swears and affirms under penalty of perjury that, in accordance with KRS 45A.494(2), the entity bidding is an individual, partnership, association, corporation, or other business entity that, on the date the contract is first advertised or announced as available for bidding:

1. Is authorized to transact business in the Commonwealth;
2. Has for one year prior to and through the date of advertisement
   a. Filed Kentucky corporate income taxes;
   b. Made payments to the Kentucky unemployment insurance fund established in KRS 341.49; and
   c. Maintained a Kentucky workers' compensation policy in effect.

KCTCS reserves the right to request documentation supporting a bidder's claim of resident bidder status. Failure to provide such documentation upon request shall result in disqualification of the bidder or contract termination.

_____ _____
Signature Printed Name

_____ _____
Title Date

Company Name _____

Address _____

_____

Subscribed and sworn to before me by _____ _____
(Affiant) (Title)

of _____ this _____day of_____,20___.
(Company Name)

_____
Notary Public
[seal of notary] My commission expires: _____